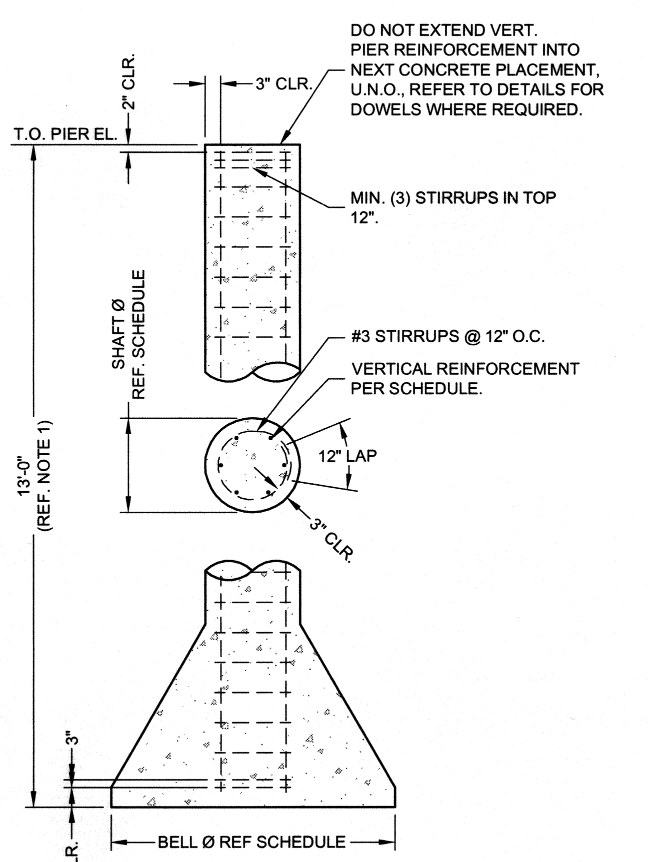

PIER SCHEDULE			
MARK	SHAFT Ø	BELL Ø	REINF.
P1	18"	48"	(6) #5
P2	18"	54"	(6) #5
P3	24"	54"	(7) #6
P4	24"	60"	(7) #6
P5	24"	72"	(7) #6

NOTES:

1. DEPTH OF PIER IS INDICATED FOR BIDDING PURPOSES ONLY. ACTUAL DEPTH SHALL BE VERIFIED IN THE FIELD BY THE TESTING AGENCY. BOTTOM OF PIER SHALL BEAR AT 13 FEET BELOW EXISTING GRADE (PRIOR TO EARTHWORK).
2. PIER CASINGS MAY BE REQUIRED. REFER TO THE GEOTECHNICAL REPORT. CONTRACTOR SHALL PROVIDE AN ADD PRICE PER FOOT OF CASING LENGTH.
3. PER THE GEOTECHNICAL ENGINEER'S RECOMMENDATIONS, THE FOUR CORNER PIERS SHALL BE DRILLED FIRST TO BETTER EVALUATE THE CONSTRUCTABILITY OF THE DEPTH AND BELL TO SHAFT RATIOS RECOMMENDED. CONTACT ENGINEER WITH ANY VARIATIONS DISCOVERED.

1 DRILLED PIER DETAIL
N.T.S.

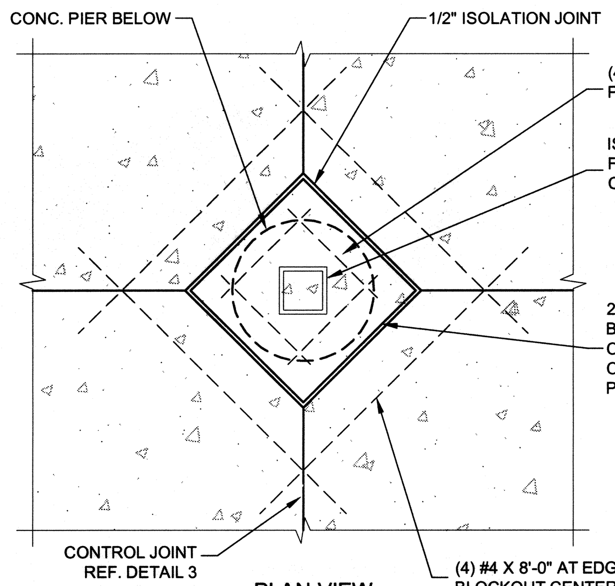

2 INTERIOR COLUMN DIAMOND POUR
N.T.S.

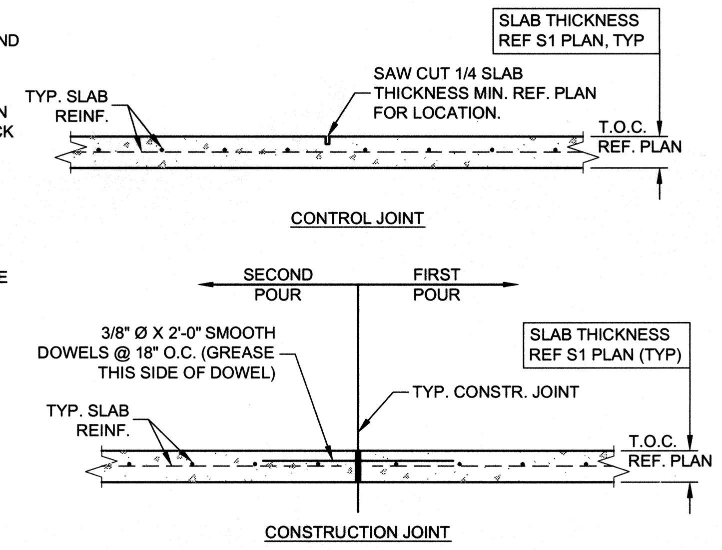

3 SLAB JOINTS
N.T.S.

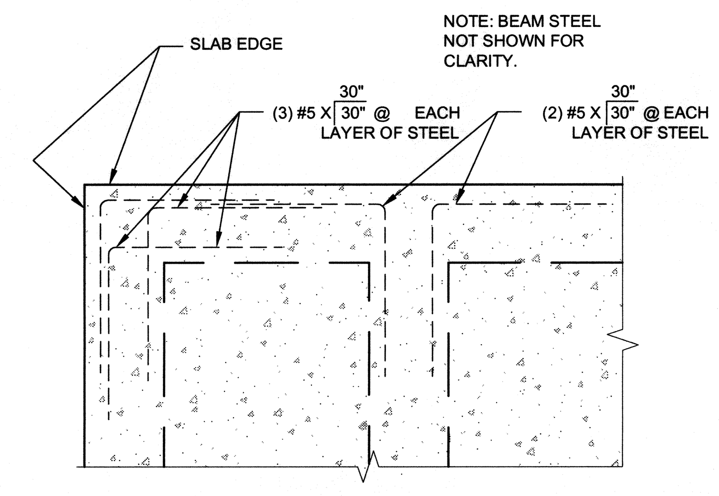

4 INTERSECTING BEAM REINF.
N.T.S.

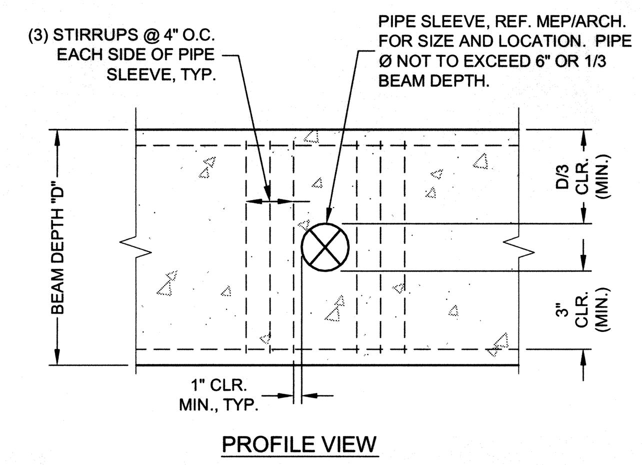

5 BEAM PENETRATION
N.T.S.

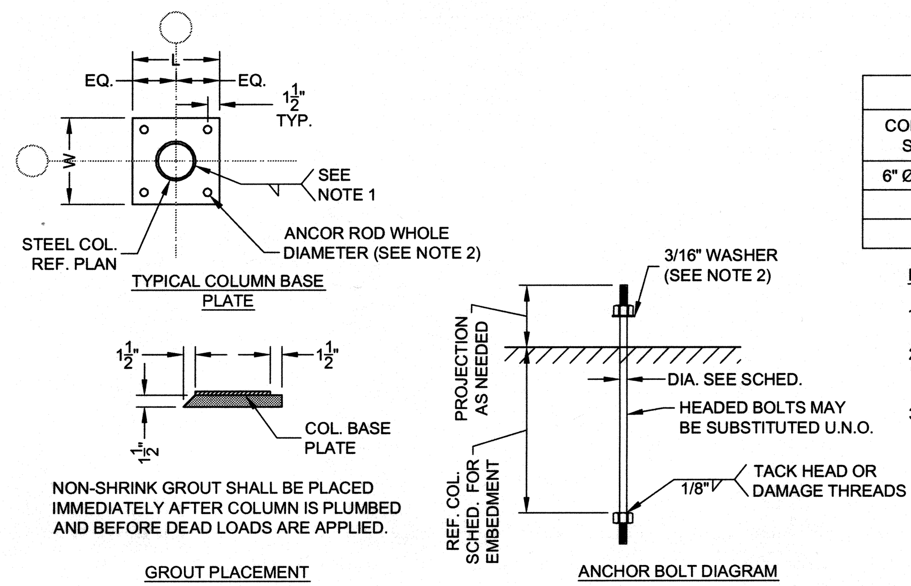

COLUMN SCHEDULE		
COLUMN SIZE	BASE PLATE (L X W X T)	ANCHOR BOLTS (DIAMETER X EMBEDMENT)
6" Ø PIPE	12" X 12" X 3/4"	(4) 3/4" X 9" EMBED, ASTM F1554 GRADE 36

NOTE:

1. SIZE WELDS PER AISC MIN. FILLET REQUIREMENTS (4 SIDES, TYP.)
2. ANCHOR ROD HOLES IN BASE PLATES AND MIN. WASHER DIAMETER SHALL BE SIZED IN ACCORDANCE WITH TABLE 14-2 OF THE AISC MANUAL OF STEEL CONSTRUCTION, 13TH ED.
3. BASE PLATE SIZES ARE TYPICAL UNLESS OTHERWISE NOTED IN THE DRAWINGS.

6 COLUMN BASE PLATE AND ANCOR BOLT DIAGRAMS
N.T.S.

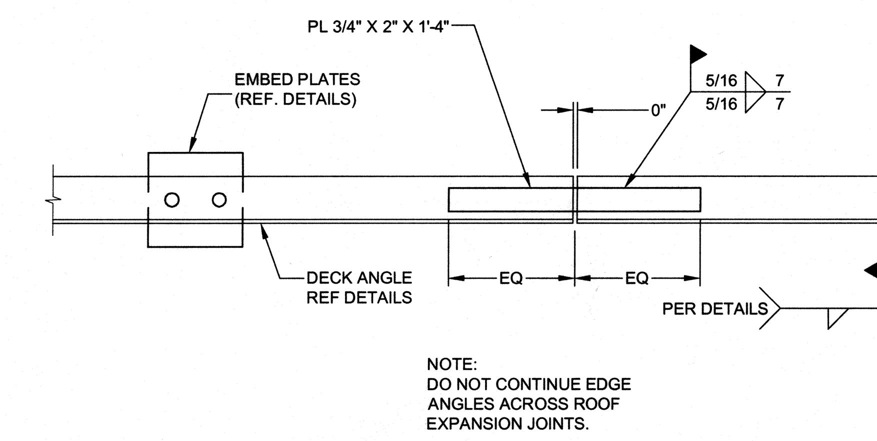

NOTE:
DO NOT CONTINUE EDGE ANGLES ACROSS ROOF EXPANSION JOINTS.

7 EDGE ANGLE
N.T.S.

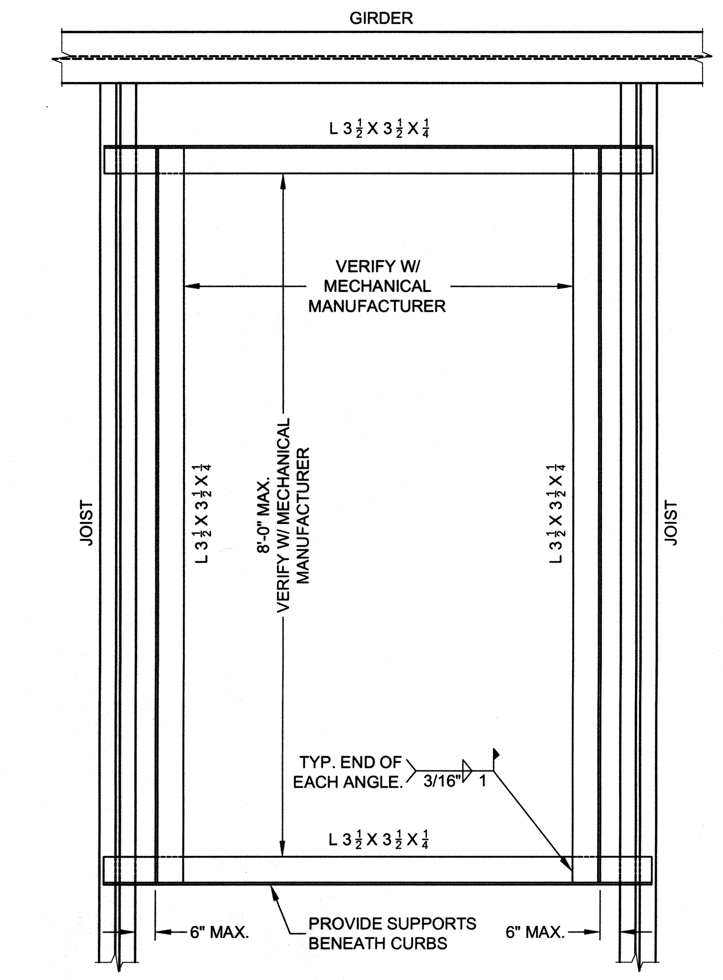

8 ROOF OPENING
N.T.S.

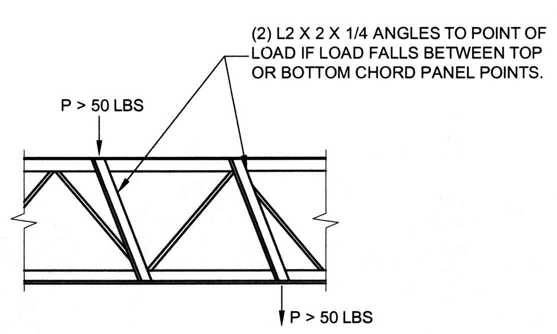

NOTE:

PROVIDE JOIST REINFORCEMENT WHERE LOADS IN EXCESS OF 50 LBS. ARE NOT LOCATED WITHIN 3 INCHES OF A TOP OR BOTTOM CHORD PANEL POINT.

9 JOIST REINFORCING
N.T.S.

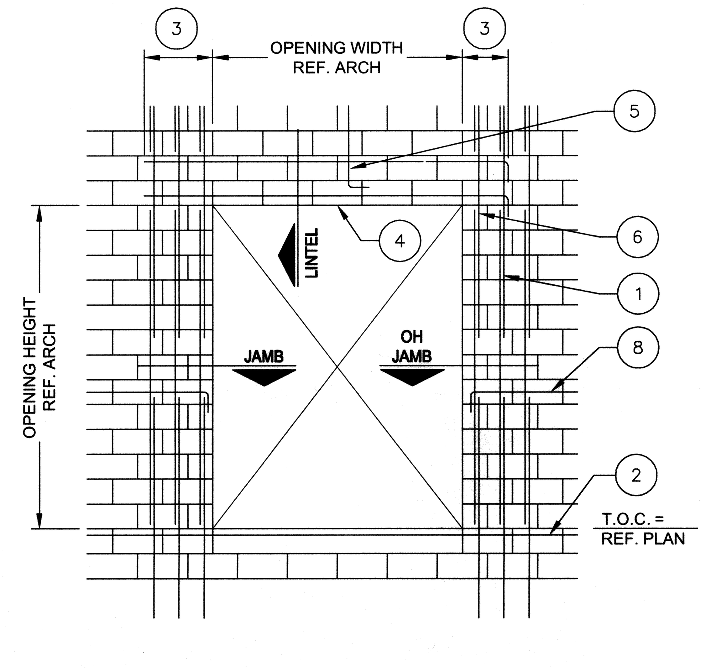

TYPICAL DOOR OPENING

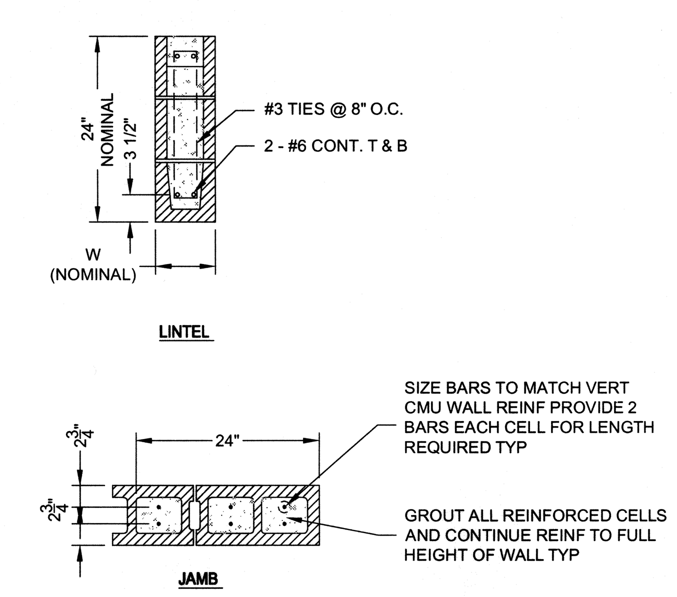

NOTES:

1. SPLICES IN VERT REINF REF CMU WALL REINF DIAGRAM.
2. BOND BEAM, 2-#5 CONTINUOUS.
3. EXTEND GROUTED LINTEL A MINIMUM OF 2'-0"BEYOND FACE OF OPENING EACH SIDE FOR STRAIGHT LINTEL REINF AND 1'-0" FOR LINTEL REINF WITH STANDARD ACI HOOK.
4. USE LINTEL BLOCKS ONLY FOR BOTTOM COURSE OF LINTEL BEAMS OVER OPENING.
5. CONTINUE VERT WALL REINF OVER OPENING. ANCHOR VERT REINF INTO LINTEL BEAM WITH STANDARD ACI 90° HOOK.
6. ALL VERT BARS AT DOOR JAMBS TO BE FULL HEIGHT.
7. #5 SILL REINF. SOLID GROUT SILL.
8. WHERE HORIZONTAL REINF IS TERMINATED BY OPENING OR CONTROL JOINT PROVIDE STANDARD ACI HOOK WITH VERT WALL REINF IN THE END CELL.

10 TYPICAL MASONRY WALL OPENING DIAGRAM AND SCHEDULE
N.T.S.

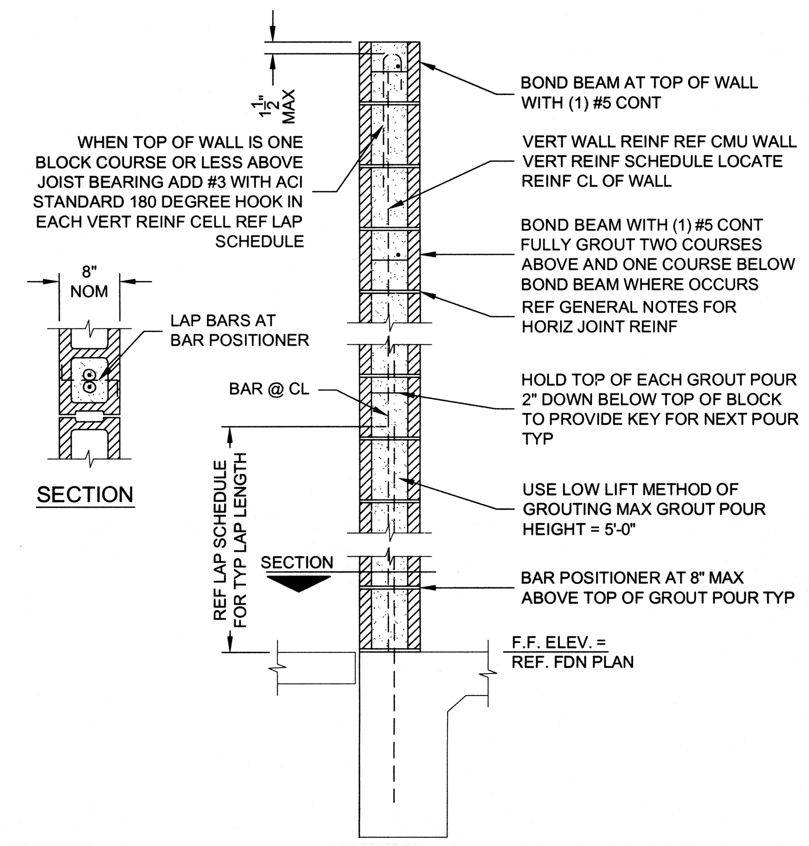

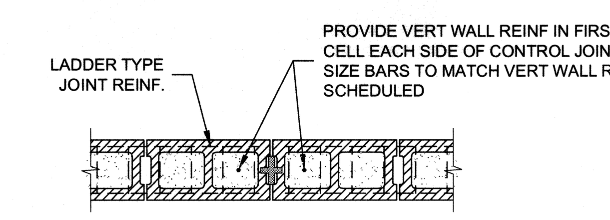

NOTE:

GROUT, CONCRETE, REINF BARS, JOINT REINF AND BOND BEAMS SHALL BE DISCONTINUOUS DOWN TO TOP OF GRADE BEAM AT CONTROL JOINTS. REF ARCHITECT FOR CONTROL JOINT LOCATIONS. DO NOT LOCATE CONTROL JOINT WITHIN 2'-0" OF OPENINGS U.N.O. PROVIDE NEAR CORNERS AND AT A MAXIMUM OF 20 FT. ON CENTER.

CONTROL JOINT

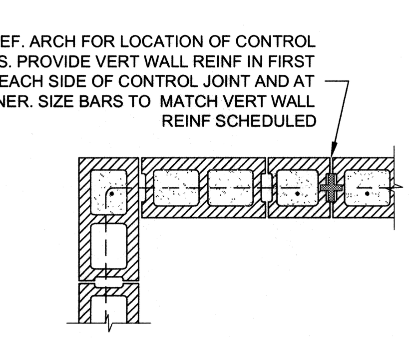

NOTES WHERE CONTROL JOINT DOES NOT OCCUR AT CORNER:

1. PROVIDE CORNER BARS TO BOND BEAM. REINF OR PROVIDE 90 DEGREE HOOK.
2. EXTEND HORIZ JOINT REINF TO END OF WALL IN BOTH DIRECTIONS SO THAT IT LAPS AT THE CORNER.
3. PROVIDE VERT WALL REINF IN THE CORNER CELL.

CORNER

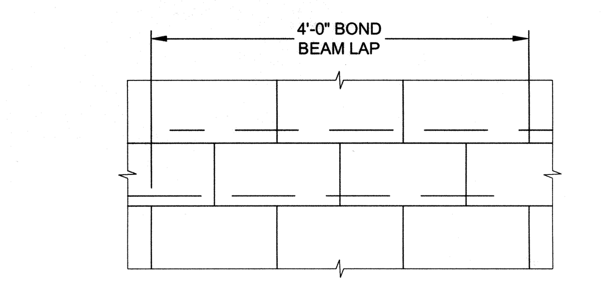

BOND BEAM STEP (NOT @ CONTROL JOINT)

NOTES:

1. GROUT SOLID ALL CELLS WITH REINFORCING, AND ALL CELLS BELOW GRADE.
2. USE BOND BEAM BLOCKS WITH OPEN BOTTOMS ONLY AT BOND BEAM LOCATIONS. DO NOT USE THROUGH-TYPE BLOCKS AT BOND BEAMS.
3. ALL MASONRY SHALL BE LAID IN RUNNING (COMMON) BOND.
4. BOND BEAM REINF. w/ 2-#5 CONT. SHALL BE PROVIDED @ 2nd FLOOR, ROOF BEARING & @ THE TOP WALLS. BOND BEAMS IN BETWEEN THESE THREE LEVELS SHALL NOT BE SPACED MORE THAN 8'-0" O.C. BOND BEAMS SHALL BE STEPPED AS REQ'D. @ PARAPET STEPS & TO MATCH ROOF SLOPES. (BOND BEAM STEP DETAIL SHOWN ABOVE)
5. REFER CMU WALL VERT. REINF. SCHEDULE FOR VERTICAL REINF. AND DOWELS.
6. HORIZONTAL JOINT REINF. SHALL BE SPACED AT 16" O.C. ABOVE GRADE AND AT 8" BELOW GRADE AND IN PARAPETS.

LAP SCHEDULE	
BAR SIZE	LAP
#5	48"
#6	54"

CMU WALL VERTICAL REINF. SCHEDULE		
MARK	WALL	REINFORCING
1	8"	(1) #5 DOWEL @ 24" O.C. & (1) #5 VERT. @ 24" O.C.

11 CMU WALL DIAGRAM
N.T.S.

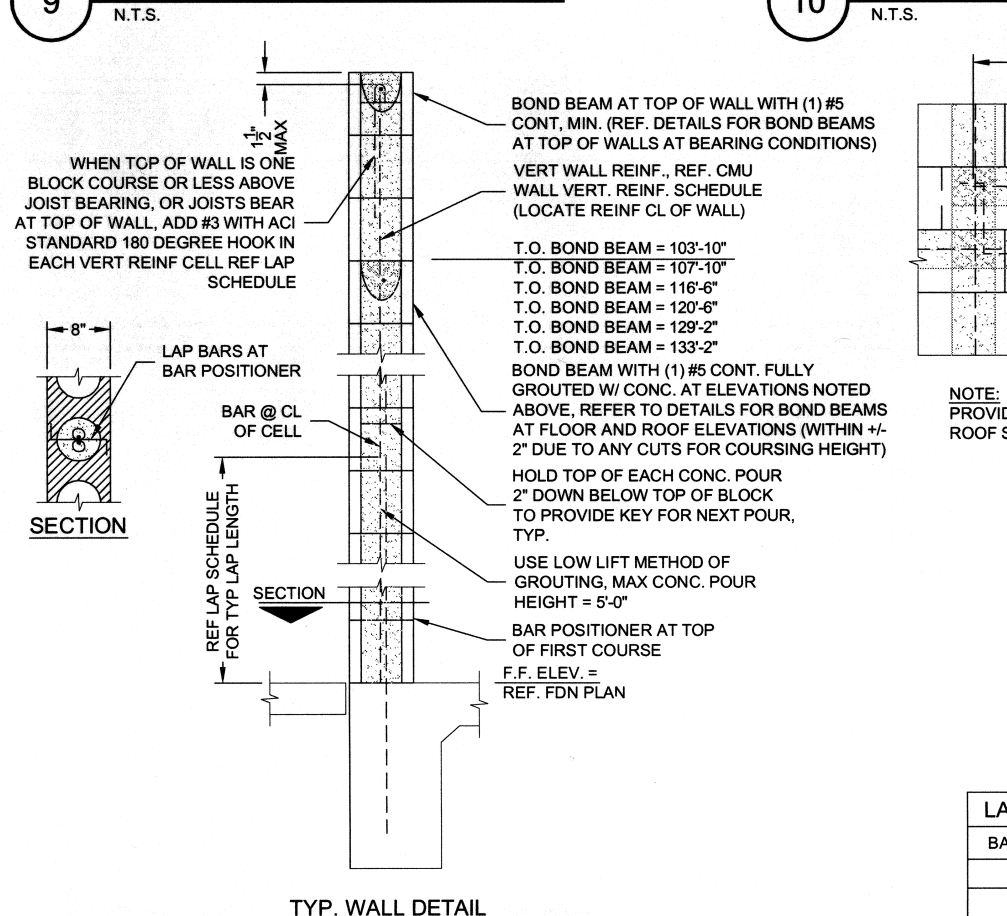

TYP. WALL DETAIL

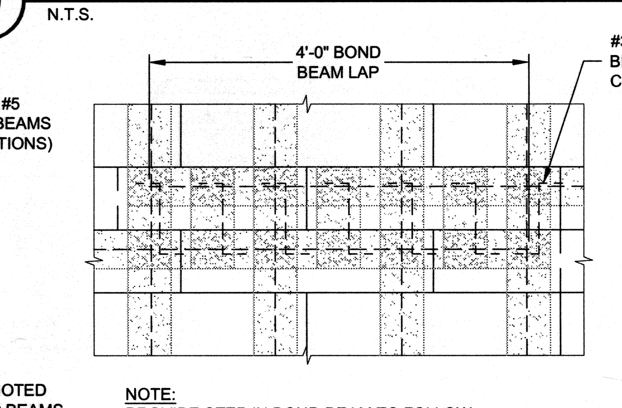

NOTE:
PROVIDE STEP IN BOND BEAM TO FOLLOW ROOF SLOPE AS REQUIRED.

BOND BEAM STEP

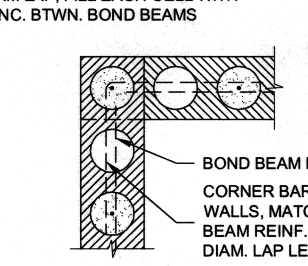

NOTE:
PROVIDE VERT WALL REINF IN THE CORNER CELL, REGARDLESS OF LAYOUT.

CORNERS

WALL NOTES:

1. FILL SOLID WITH CONCRETE ALL CELLS WITH REINFORCING.
2. USE BOND BEAM BLOCKS WITH OPEN BOTTOMS ONLY AT BOND BEAM LOCATIONS. REFER TO DETAILS FOR BOND BEAMS AT THE FLOOR AND ROOF.
3. ALL THERMOBLOCKS SHALL BE LAID IN RUNNING (COMMON) BOND.
4. REFER THERMOBLOCK WALL VERT. REINF. SCHEDULE FOR VERTICAL REINF. AND DOWELS.
5. PROVIDE C5 X 1.625" - 25 GA. MTL STUDS AT ALL UNREINFORCED VERTICAL CELLS. STUDS SHALL BE DISCONTINUOUS AT BOND BEAMS (DO NOT CONTINUE THROUGH).
6. REFER TO THERMOBLOCK WALL OPENING REINF. SCHEDULE FOR HEADER, SILL, AND JAMB REINF. AT OPENINGS.
7. REFER TO 15/S6 FOR BEAM CONNECTIONS. VERTICAL REINF. CELLS AT BEAM BEARINGS SHALL EXTEND TO FOUNDATION.

LAP SCHEDULE	
BAR SIZE	LAP
#3	28"
#4	36"
#5	48"
#6	54"

THERMOBLOCK WALL VERTICAL REINF. SCHEDULE		
MARK	WALL	REINFORCING
A	8"	(1) #6 DOWEL @ 16" O.C. & (1) #6 VERT. @ 16" O.C.
B	8"	(1) #5 DOWEL @ 16" O.C. & (1) #5 VERT. @ 16" O.C.
C	8"	(1) #6 DOWEL @ 16",8",16" O.C. & (1) #6 VERT. @ 16",8",16" O.C.
D	8"	(1) #46 DOWEL @ 32" O.C. & (1) #4 VERT. @ 32" O.C.

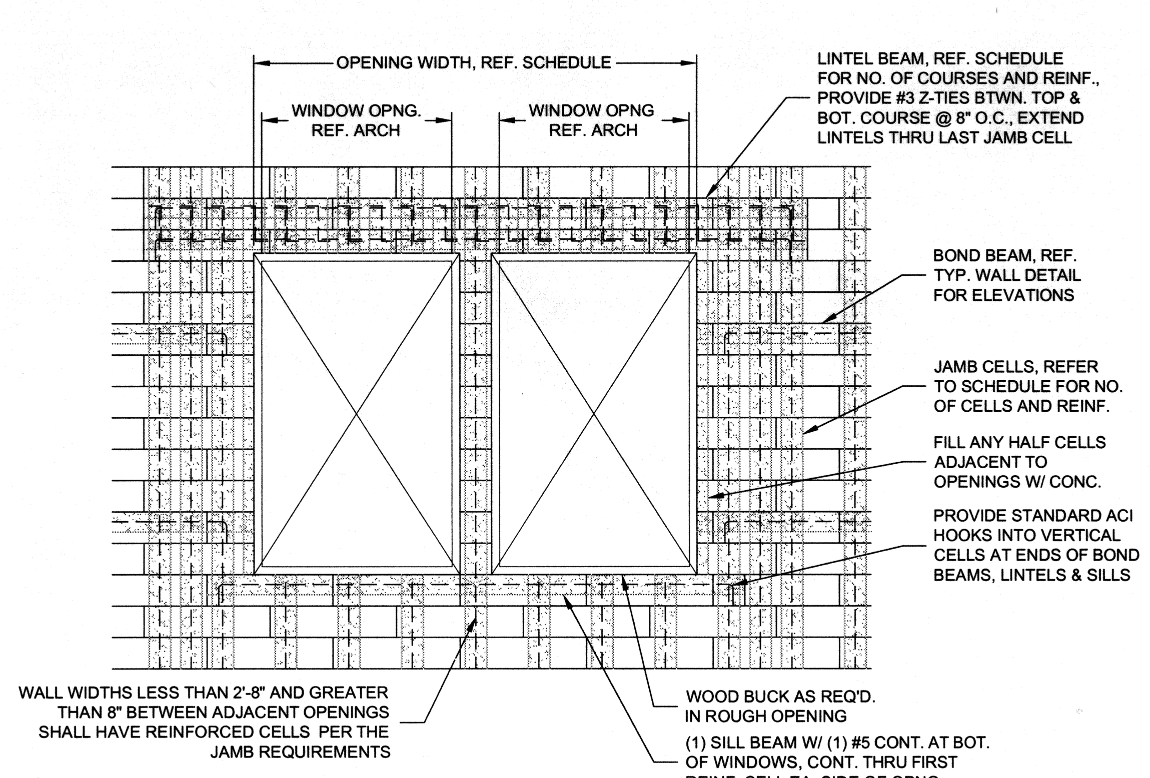

THERMOBLOCK OPENING ELEVATION

THERMOBLOCK WALL OPENING REINF. SCHEDULE					
OPENING	WALL	LINTEL		JAMB CELL (EA. SIDE OPNG.)	
		NO. COURSES	REINF.	NO. CELLS	REINF.
0 - 4'-0"	8"	2	4	2	6
4'-1" - 7'-0"	8"	2	5	2	6
7'-1" - 9'-0"	8"	3	5	3	6

OPNG. NOTES:

1. WHERE BOND BEAMS OCCUR ABOVE OPENINGS, AND WITHIN THE REQUIRED LINTEL HEIGHT, THEY MAY COUNT AS ONE COURSE OF THE LINTEL.
2. FILL WITH CONCRETE ALL VERTICAL CELLS WITHIN THE LINTEL HEIGHT.
3. JAMB REINF. SHALL EXTEND TO BOND BEAM AT FLOOR AND ROOF ELEVATIONS ABOVE AND BELOW. PROVIDE STANDARD AC1 HOOK INTO BEAM IF REINF. DOES NOT CONTINUE THRU FOR TYP. WALL REINF. OR SIM. OPENING ABOVE OR BELOW.

12 ICF WALL & OPNG. DIAGRAMS
N.T.S.

hatch + ulland owen architects
702 San Antonio Street
Austin, Texas 78701
T: 512.474.8548
F: 512.474.8643
www.huoarchitects.com

CIVIL ENGINEER:
TEXAS DESIGN INTERESTS
6001 W. WILLIAM CANNON
AUSTIN, TX 78749
512-301-3389

STRUCTURAL ENGINEER:
TEXAS DESIGN INTERESTS
6001 W. WILLIAM CANNON
AUSTIN, TX 78749
512-301-3389

MECHANICAL, ELECTRICAL & PLUMBING ENGINEERS:
AYS ENGINEERING, LLC
3905 SAM BASS ROAD
ROUND ROCK, TX 78681
512-961-6835

LANDSCAPE ARCHITECT:

HOUSTON GATEWAY ACADEMY
INC

BOWIE CAMPUS

7310 BOWIE ST
HOUSTON, TX 77012

CITY OF HOUSTON
PROJECT # 09044674

NOTE: This document, the ideas and design incorporated herein are and shall remain the property of h+uo architects. These documents are not to be used or altered, in whole or in part, for other than the original intended use, nor are they to be assigned to any third party without written permission from h+uo architects.

NOTE: By act of submitting a bid for the proposed contract, the bidder warrants that the bidder, and all subcontractors and material suppliers he intends to use have carefully and thoroughly reviewed the drawings and specifications and other construction documents and have found them complete and free from any ambiguities and sufficient for the purpose intended. The bidder further warrants that to the best of their or their subcontractor's and material supplier's knowledge all materials and products specified or indicated herein are acceptable for all applicable codes and authorities.

STATE OF TEXAS
JOHN R. BEARDEN
92544
REGISTERED PROFESSIONAL ENGINEER
6.5.09
FIRM REG. # F-8601

PROJECT MGR:
DRAWN BY: CHKD. BY:

ISSUE DATES:

△	date	issue
	06.05.09	PERMIT SET

PROJECT # 302-103

TEXAS DESIGN INTERESTS, LLC
AUSTIN • HOUSTON
6001 W. WILLIAM CANNON
BUILDING 2, SUITE 203-C
AUSTIN, TX 78749
(512) 301-3389 (o)
(512) 301-3348 (f)
COMMERCIAL/RESIDENTIAL - CIVIL & STRUCTURAL ENGINEERING

TYPICAL DETAILS
S4